FuelCell Energy

Ultra-Clean, Efficient, Reliable Power

# DFC3000

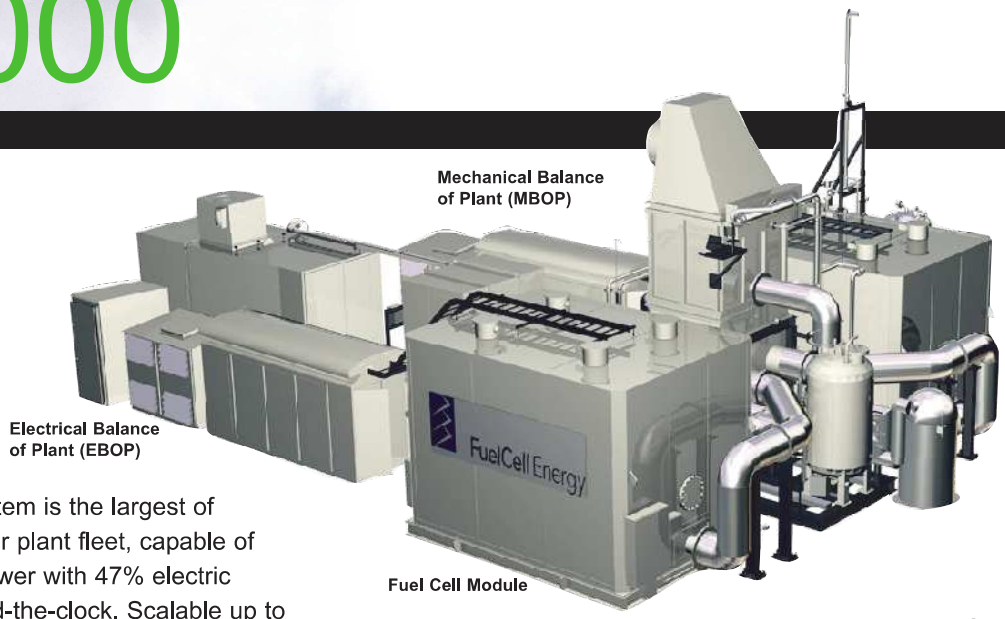


2.8 MW, 13.8 kVAC
3,110 kVA, 50 or 60 Hz

## Key Features

- High Efficiency
- Low Environmental Impact
- Fuel Flexibility
- High Reliability
- Quiet Operation

## Advantages

FuelCell Energy's DFC3000™ system is the largest of the Direct FuelCell® (DFC®) power plant fleet, capable of providing high-quality baseload power with 47% electric power generation efficiency around-the-clock. Scalable up to 50 MW, the system is especially suitable for applications with larger load requirements such as universities, manufacturing facilities, wastewater treatment plants, and utility/grid support.

## Performance

| | |
|---|---|
| **Power Output** | |
| Power @ Plant Rating | 2,800 kW |
| Standard Output AC Voltage | 13,800 V |
| Standard Frequency | 60 Hz |
| Optional Output AC Voltages | 12,700, 4,160 V |
| Optional Output Frequency | 50 Hz |
| **Efficiency** | |
| LHV | 47 +/- 2 % |
| **Available Heat** | |
| Exhaust Temperature | 700 +/- 50 °F |
| Exhaust Flow | 36,600 lb/h |
| Allowable Backpressure | 5 iwc |
| Heat Energy Available for Recovery (to 250°F) | 4,433,000 Btu/h |
| (to 120°F) | 7,460,000 Btu/h |
| **Fuel Consumption** | |
| Natural gas (at 930 Btu/ft$^3$) | 362 scfm |
| Heat Rate, LHV | 7,260 BTU/kWh |

| | |
|---|---|
| **Water Consumption** | |
| Average | 9 gpm |
| Peak during WTS backflush | 30 gpm |
| **Water Discharge** | |
| Average | 4.5 gpm |
| Peak during WTS backflush | 30 gpm |
| **Pollutant Emissions** | |
| NOx | 0.01 lb/MWh |
| SOx | 0.0001 lb/MWh |
| PM10 | 0.00002 lb/MWh |
| **Greenhouse Gas Emissions** | |
| $CO_2$ | 980 lb/MWh |
| $CO_2$ (with waste heat recovery) | 520-680 lb/MWh |
| **Sound Level** | 72 dB(A) at 10 feet |

# Specifications

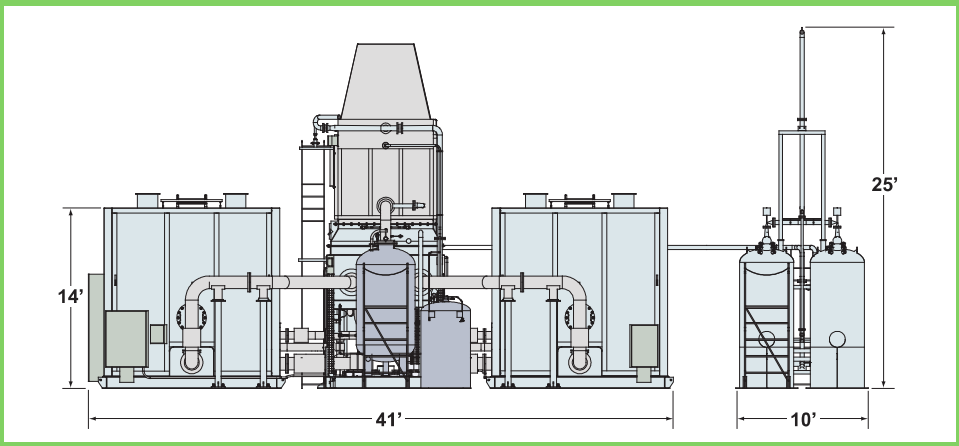


**Weights**

Water Treatment Skid
20,000 lb

Main Process Skid
50,000 lb

Desulfurization
15,000 lb

Electrical Balance of Plant
60,000 lb

Fuel Cell Module
107,000 lb *(each module)*

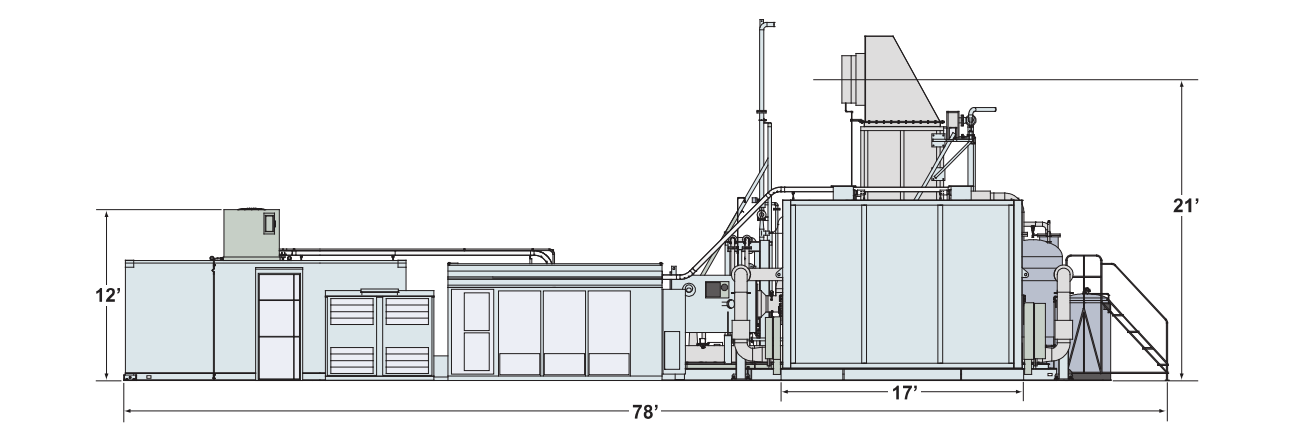


**Experience & Capabilities**

DFC® fuel cells are generating power at over 50 locations worldwide. The Company's power plants have generated over 650 million kWh of power using a variety of fuels including renewable wastewater gas, biogas from beer and food processing, as well as natural gas and other hydrocarbon fuels. FuelCell Energy has partnerships with major power plant developers and power companies around the world. The Company also receives funding from the U.S. Department of Energy and other government agencies for the development of leading edge technologies such as fuel cells. For more information please visit our website at www.fuelcellenergy.com

This brochure provides a general overview of FuelCell Energy products and services. This brochure is provided for informational purposes only. Warranties for FuelCell Energy products and services are provided only by individual sales and service contracts, and not by this brochure. This brochure is not an offer to sell any FuelCell Energy products and services. Contact FuelCell Energy for detailed product information suitable for your specific application. FuelCell Energy reserves the right to modify its products, services, and related information at any time without prior notice.

FuelCell Energy's fleet of Direct FuelCell power plants are certified to or comply with a variety of commercial and industrial standards: ANSI/CSA America FC-1, UL 1741, CARB 2007, OSHA 29 CFR Part 1910, IEEE 1547, NFPA 70, NFPA 853, and California Rule 21.

FuelCell Energy with the corresponding logo is a registered trademark of FuelCell Energy, Inc. "Direct FuelCell," "DFC" and "DFC/T" are registered trademarks of FuelCell Energy, Inc. © FuelCell Energy, Inc. 2010. All rights reserved.

**FuelCell Energy, Inc.**
3 Great Pasture Road
Danbury, CT 06813-1305
203 825-6000

**www.fuelcellenergy.com**

FuelCell Energy
Ultra-Clean, Efficient, Reliable Power